PCIM, June 09th – 11th 2026, Nuremberg, Germany

Timing Analysis and Comparison of EtherCAT and RS-485 Communication in a Modular Multilevel Converter

Stefan Orterer[1], Niklas Krug[2], Mario Wasner[2], Thomas Heckel[1], Marek Galek[2]

stefan.orterer@iisb.fraunhofer.de

[1], chair of XX – Fraunhofer IISB, Erlangen
[2], chair of XX – University of Applied Sciences Munich, Munich

Motivation

Conventional Star Topology
In conventional MMC communication architectures, each submodule is connected directly to the central controller using dedicated optical fiber links. While this approach provides deterministic timing and galvanic isolation, it leads to extensive cabling effort, increased system complexity, and limited scalability for large converter systems.

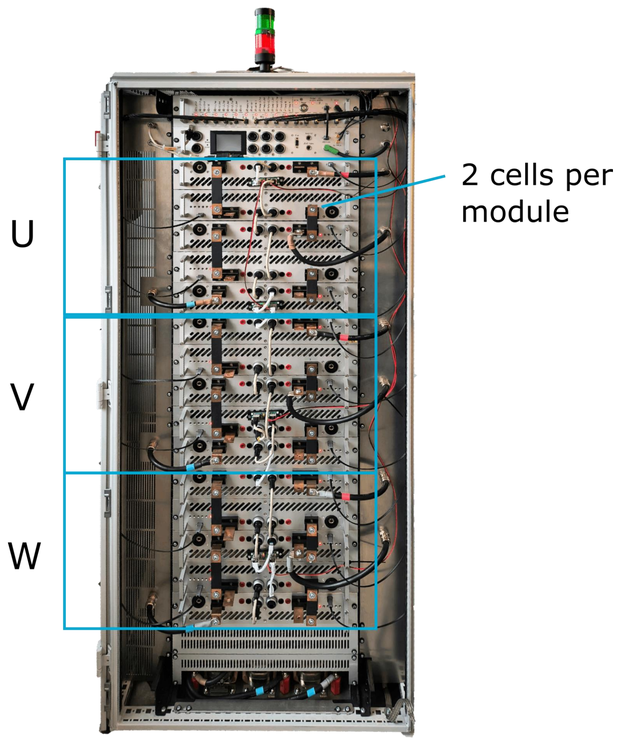

Experimental MMC

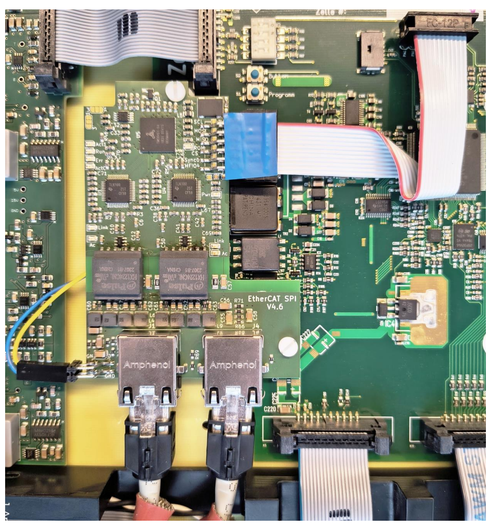

EtherCAT PCB added in a Module

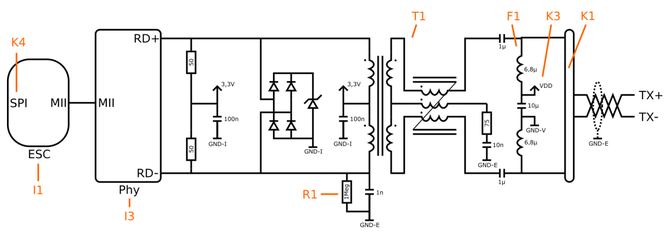

EtherCAT PCB detailed

MMC System Overview

Modular Multilevel Converter Structure

- 3 phases
- 2 half bridges per module
- FPGA-based local control
- Additional measurement and relay modules
- Distributed synchronization

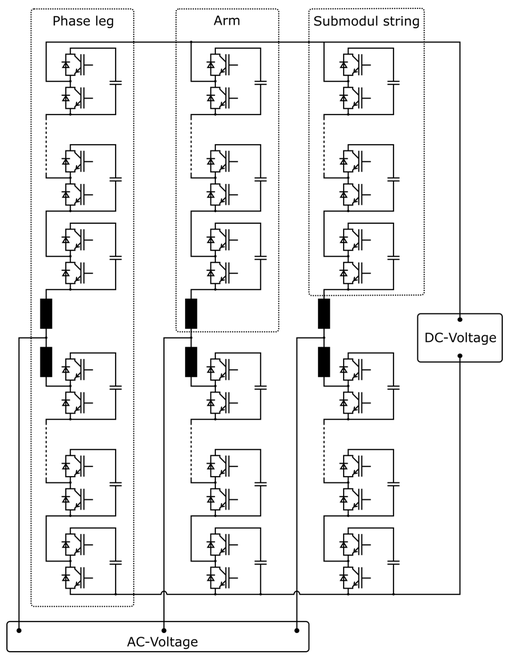

MMC Schematic

Hardware Architecture of One Module
Each module contains two half bridges whose gate signals are generated by a Xilinx FPGA via dedicated gate driver circuitry. The FPGA exchanges process data with the TMC8461 EtherCAT SubDevice Controller (ESC) using SPI communication. The EtherCAT signal is transmitted by the ESC through Ethernet transceivers.

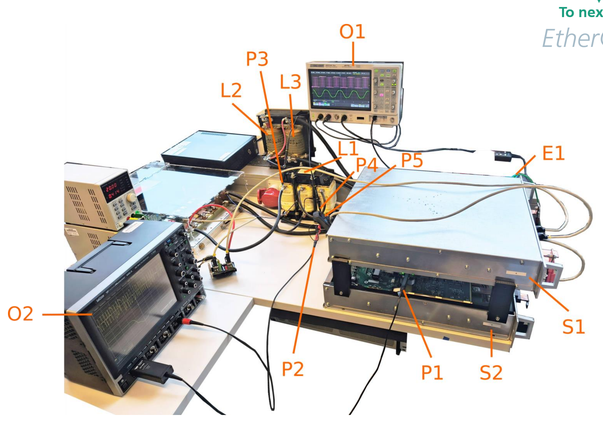

Test setup for module testing with EtherCAT

Communication Systems

Previous System: Proprietary RS485 Communication Architecture
The previous communication system was based on RS485 multidrop communication. RS485 utilizes higher signaling voltages (± 5 V), however as system size increases susceptibility to interference becomes a challenge.

Characteristics

- Shared bus topology
- High broadcast efficiency
- Limited bidirectional bandwidth
- Increasing latency with node count
- Limited voltage isolation of signal transformers

Limitations

- Scalability limitations
- Synchronization challenges
- Bus contention during feedback transmission
- Number of participants limited to a few hundred without repeater [1]

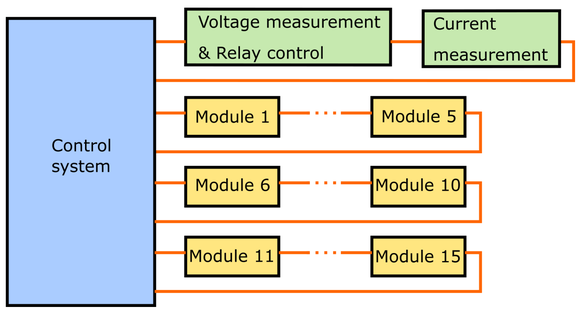

RS485 Communication Wiring

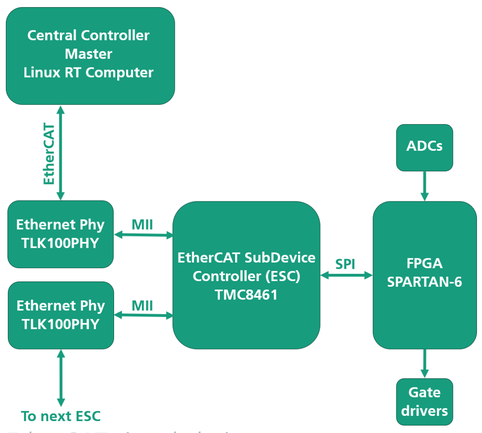

EtherCAT signal chain

New System: EtherCAT-Based Architecture
The new communication architecture is based on EtherCAT with Power over EtherCAT (PoE). This enables simultaneous data transmission and module supply using standard Ethernet cabling. Each participant is connected in a point-to-point structure with minimal communication latency. Accumulated noise is effectively eliminated by the point-to-point signal regeneration.

Key Features

- Full duplex Ethernet communication
- Point-to-point topology
- On-the-fly data processing
- Distributed clock synchronization
- Power and data over single cable
- Reduced EMI susceptibility
- Possibility of sending asynchronous data in critical fault condition
- Optical transmission for higher isolation and low susceptibility to interference

Master System

- Real-time Linux controller
- Simple Open EtherCAT Master (SOEM)
- Centralized control algorithm
- Distributed synchronization management

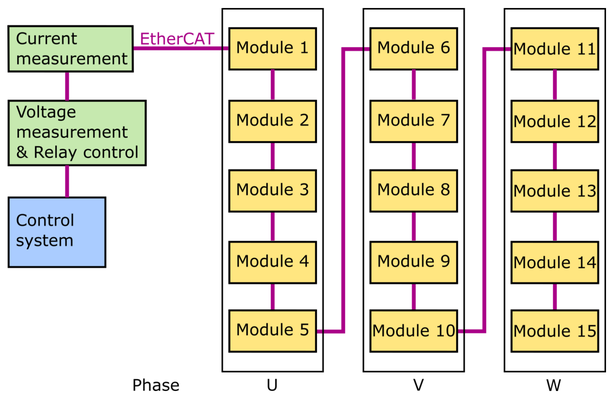

EtherCAT Communication Wiring

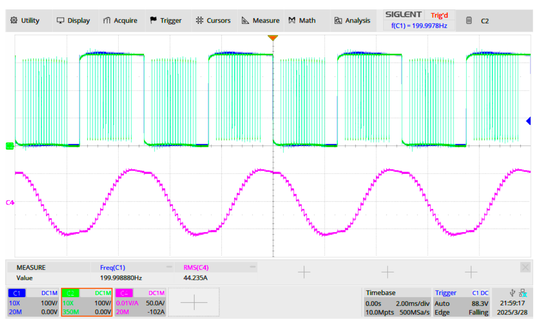

Measurement during module test

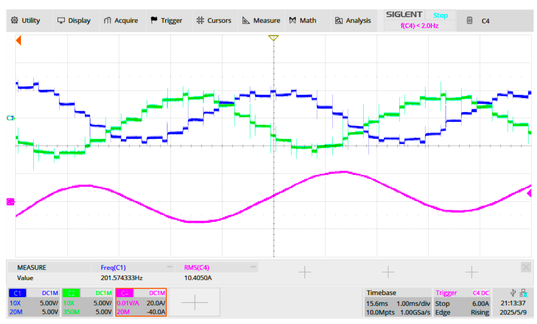

Full MMC running with EtherCAT

1 M. Galek, M2C-Converter auf Basis von MOS-Transistoren für Niederspannungsnetze (Forschungsberichte Leistungselektronik und Steuerungen). Aachen: Shaker Verlag, Nov. 2016, vol. 9.

PCIM, June 09th – 11th 2026, Nuremberg, Germany

Timing Analysis and Comparison of EtherCAT and RS-485 Communication in a Modular Multilevel Converter

Stefan Orterer[1], Niklas Krug[2], Mario Wasner[2], Thomas Heckel[1], Marek Galek[2]

stefan.orterer@iisb.fraunhofer.de

[1], chair of XX – Fraunhofer IISB, Erlangen
[2], chair of XX – University of Applied Sciences Munich, Munich

Objective & Measurement Setup

Objective

The objective of this work is the evaluation of communication latency and synchronization accuracy in EtherCAT-based MMC communication systems and the comparison with the previously used RS485 architecture.

Measurement Setup

Timing measurements were performed across 15 EtherCAT participants of the MMC prototype. Synchronization quality, frame jitter, node latency, and deterministic behavior were analyzed using oscilloscope-based timing measurements.

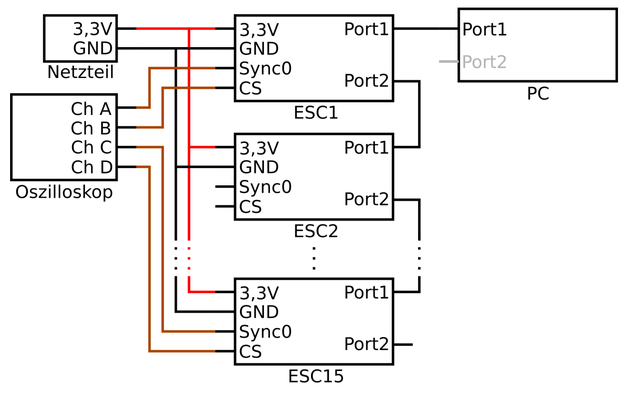

EtherCAT timing measurement setup

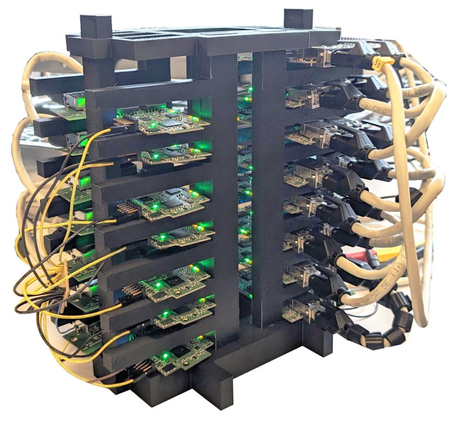

Pretest 15 ESCs in a Stack

EtherCAT Timing Results

Communication Latency

- About 640 ns latency per node
- Jitter of 840 ns across 15 participants
- Linear scaling with node count
- Deterministic transmission behaviour

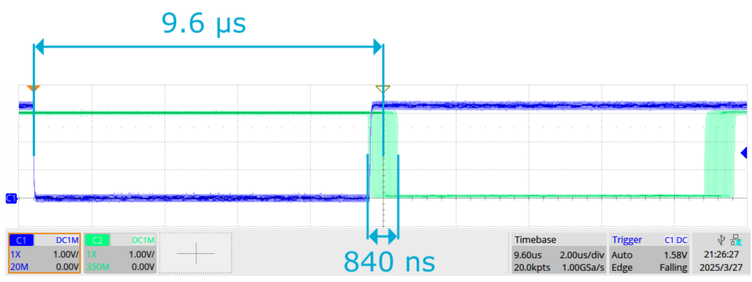

Latency between the first and 15th EtherCAT Subdevice

Distributed Clock Synchronization

- Initial frame jitter: ~840 ns
- Jitter of Sync Pulse with Distributed Clocks: ~160 ns
- Static offset across 15 Participants: ~240 ns

The synchronization pulse and the communication frames exhibit different jitter characteristics. For the synchronization pulse, jitter is minimized as much as possible in order to execute switching patterns and measurements at a highly precise point in time. A remaining static timing offset of approximately 240 ns was observed between the first and last participant. This offset is constant and therefore predictable and compensable in control applications.

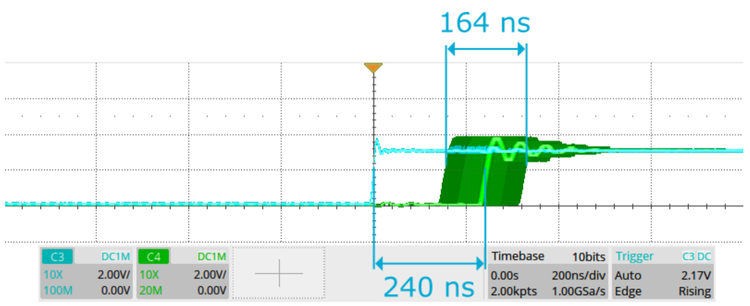

Synchronization accuracy between the first and 15th sync pulse

RS485 vs EtherCAT Comparison

Communication Comparison

Feature	RS485	EtherCAT
Broadcast speed	Very high	High
Feedback capability	Sequential	Simultaneous
Determinism	Limited	Excellent
Synchronization	Proprietary	Distributed Clocks
Topology	Shared Bus	Point-to-point
EMI robustness	Moderate	High
Scalability	Limited	Excellent
Typical cycle frequency	20 kHz broadcast	10 kHz bidirectional

RS485 Characteristics

- 20 kHz broadcast transmission [1]
- Synchronisation accuracy ± 10 ns with proprietary solution [1]
- Limited closed-loop update rate

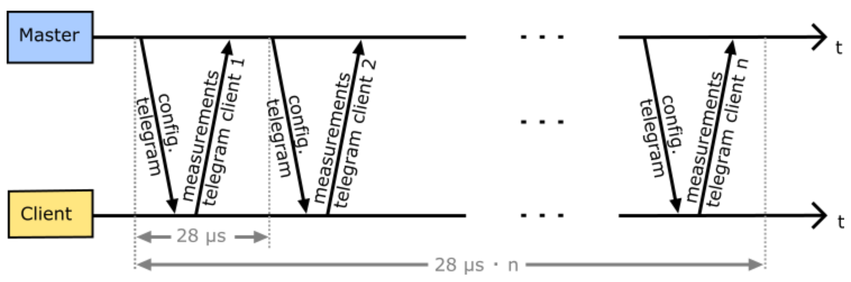

Scaling of cycle time in request-response communication over RS-485 (adapted from Galek, 2026, p.99 [1])

EtherCAT Characteristics

- 10 kHz broadcast transmission
- Synchronisation accuracy ± 82 ns
- 2.5 kHz closed-loop update rate

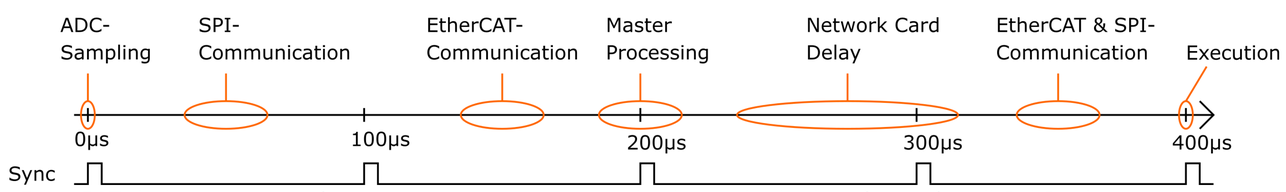

EtherCAT timing sequence from measurement to control using a single data frame for all SubDevices

Control Loop Analysis

Real-Time Control Timing

Although EtherCAT communication supports 10 kHz bidirectional process data exchange, the achievable closed-loop control frequency is limited by the cumulative delay of measurement acquisition, SPI transfers, communication latency, controller computation, and synchronized gate signal updates.

Timing Breakdown and node limit for 10 kHz communication in experimental MMC

- 640 ns delay per node
- 5 us processing time
- 5 us buffer
- Theoretical node limit = 140 nodes
- More nodes possible with lower communication frequency or higher Bandwidth

Conclusion

The presented EtherCAT-based communication architecture demonstrates significant advantages regarding deterministic timing behavior, scalability, and wiring reduction compared to the previously used RS485 system. The achieved synchronization performance confirms the suitability of EtherCAT for modular power electronic systems with distributed real-time control requirements.

1 M. Galek, M2C-Converter auf Basis von MOS-Transistoren für Niederspannungsnetze (Forschungsberichte Leistungselektronik und Steuerungen). Aachen: Shaker Verlag, Nov. 2016, vol. 9.