PCIM, June 09th – 11th 2026, Nuremberg, Germany

Automated EMI Simulation Workflow for Frequency-Variable High Power DC/DC Converter for Aviation

Anne Sacher, Fabian Reinwand, Moritz Kerscher, Stefan Ditze, Bernd Eckardt

Anne.Sacher@iisb.fraunhofer.de

Fraunhofer Institute for Integrated Systems and Device Technology IISB, Erlangen, Germany

www.iisb.fraunhofer.de/active-filters-emc

Automated simulation workflow for predicting conductive emissions (CE) of a 500 kW multiphase DC/DC converter for More Electric Aircraft (MEA), with analysis of 150 operating points (OPs).

Motivation

- MEA requires high-performance systems with low weight, compact size, high power density → EMI filters must be defined early in the design process due to impacts on weight and volume
- CE prediction needed before prototype and measurements are time-consuming, and difficult in the MW range
- Variable switching frequency (20–140 kHz) makes CE prediction difficult across the entire operating range
- Definition of filter requirements (insertion loss) to meet DO-160 standard

Topology: Multiphase DC/DC converter

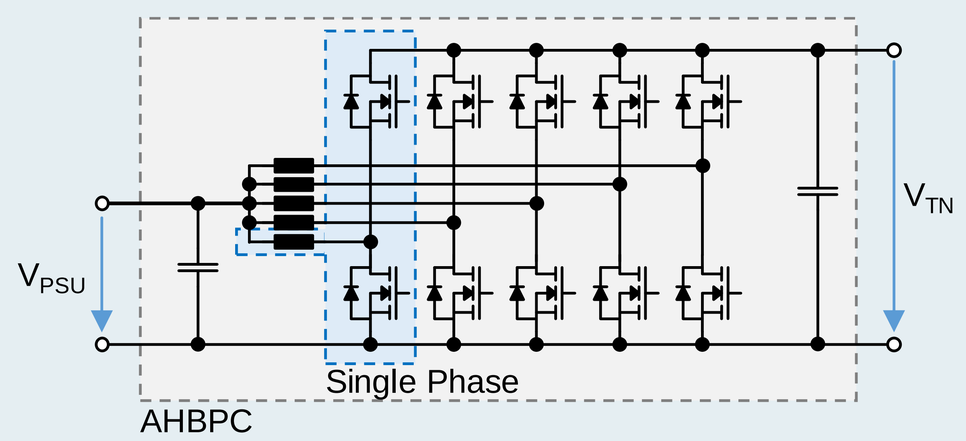

Operating modes

- BCM (Boundary Conduction Mode): f_{sw} = 20 - 140 kHz (variable)
- DCM (Discontinuous Conduction Mode): f_{sw} = 140 kHz (fixed)

Multiphase DC/DC Converter

Topology

- Aircraft Half Bridge Power Core (AHBPC), 5-phase, interleaved

Technical Specifications

- Power: 500 kW (max. 120 kW per phase)
- V_{PSU} voltage: 200 - 850 V
- V_{TN} voltage: 800 - 900 V
- Current: 750 A (5 x 150 A $i_{L,max}$)

Operating range of the AHBPC for a single phase with selected OPs

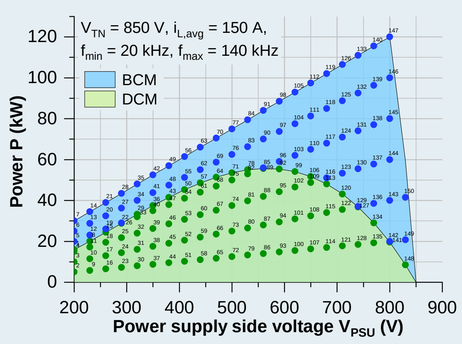

OP dependence on switching frequency f_{sw}

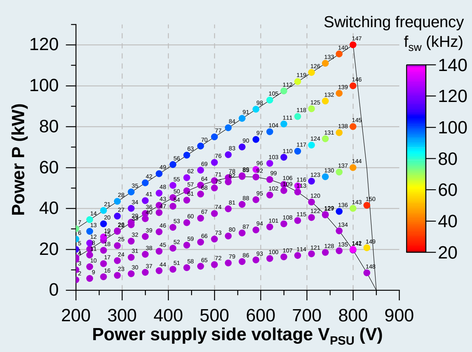

OP dependence on duty cycle δ

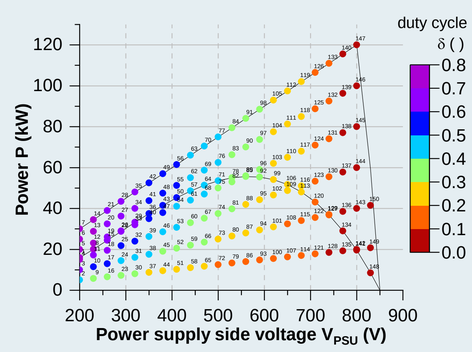

Methodology and Design Workflow

- Workflow includes three areas - modeling, automatization, and prediction
- Tri-port approach combining input and output EMI filter due to construction constraints

Tri-port EMI filter for the AHBPC

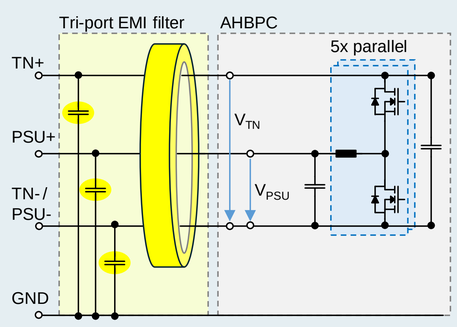

Methodology of the automated simulation-based design workflow for prediction of CE and the definition of filter requirements

Modelling

1. **Preparation simulation model**
   RF-Modelling of system components and EMC-relevant parameters
   Device level: DC link, coil, parasitics, module
2. **Setup of DM and CM equivalent circuit simulation model**
   Converter & system level
   LISN, GND concept
   Time analysis, .four directive, interference source

LTspice environment

Automatization

3. **Selection of operating points (OPs) within area of operation**
   Select: V_{TN}, V_{PSU}, P, $i_{L,avg}$, $f_{min/max}$
4. **Calculation interference source parameters for the selected OPs**
   Calculation: CM: δ, ε, f_{sw} / DM: $i_{L,min/max}$, δ, ε, f_{sw}
5. **Automated LTspice simulation of all OPs**
   Run script (loop) for simulation
   Output: Output Log file with fourier coefficients
6. **Data extraction**
   Analysis of the Fourier coefficients to determine the maximum value for each OP and conversion in dB

Octave environment

Prediction

7. **Scatter plot of CE for CM & DM for all Ops**
8. **Comparison to DO-160 standard**
   Detail view on CE of single OPs, envelope, calculate the difference to limit line
9. **Filter requirements**
   Specification of the insertion loss for CM and DM

Data analyze tool

PCIM, June 09th – 11th 2026, Nuremberg, Germany

Automated EMI Simulation Workflow for Frequency-Variable High Power DC/DC Converter for Aviation

Anne Sacher, Fabian Reinwand, Moritz Kerscher, Stefan Ditze, Bernd Eckardt

Anne.Sacher@iisb.fraunhofer.de

Fraunhofer Institute for Integrated Systems and Device Technology IISB, Erlangen, Germany

www.iisb.fraunhofer.de/active-filters-emc

Results and evaluation

Overview about the common mode (CM) and differential mode (DM) emissions and resulting filter requirements from the 3rd area.

Common mode interference spectra

- CM noise source: trapezoidal voltage source with constant V_{TN}
- CM emissions depend mainly on the system configuration (V_{TN}, parasitics) and less on converter parameters (f_{sw}, δ)
- 78% of the OPs have magnitudes within the range of 90 - 110 dBuA

Common mode – maximum magnitude A_{CM} with envelopes (left) and operating range with A_{CM} results above 110 dBuA (top 30%) (right)

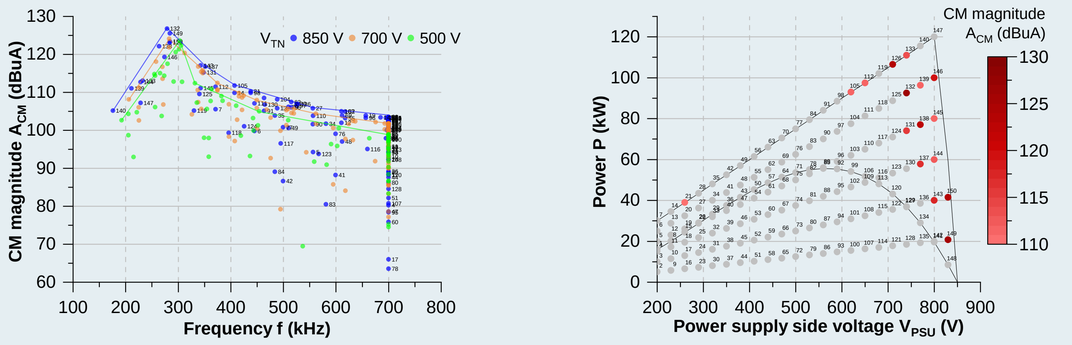

Differential mode interference spectra

DM-PSU (power supply side)

- DM-PSU noise source: current source with triangle waveform
- $A_{DM,PSU}$ results for DCM are up to 70 dBuA at 700 kHz (five times of $f_{sw,max}$) and for BCM within the range of 53 – 82 dBuA
- 19% of the OPs have DM magnitudes $A_{DM,PSU}$ above 69 dBuA and are located in the BCM region

Differential mode on PSU side – maximum magnitude $A_{DM,PSU}$ with dependence on input current ripple $i_{PP,PSU}$ (left) and operating range with $A_{DM,PSU}$ results above 69 dBuA (top 46%) (right)

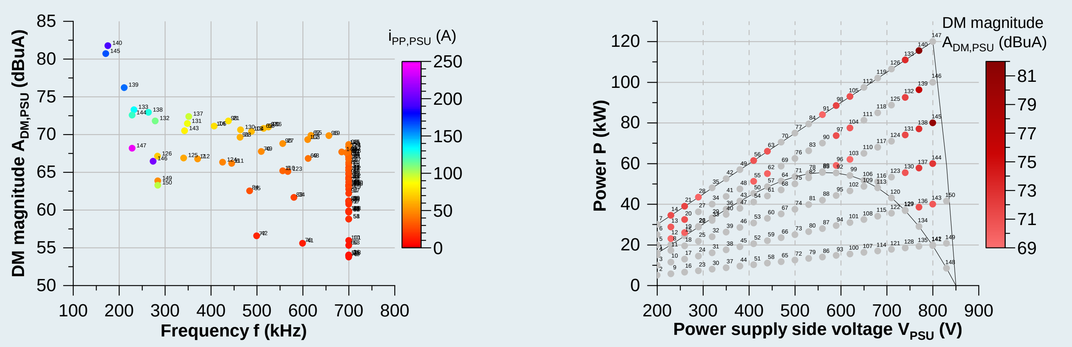

DM-TN (traction network side)

- DM-TN noise source: current source with sawtooth waveform
- $A_{DM,TN}$ results in the range of 60 – 85 dBuA for DCM and BCM
- 28% of the OPs have DM magnitudes $A_{DM,TN}$ above 80 dBuA

Differential mode on TN side – maximum magnitude $A_{DM,TN}$ with dependence on input current ripple $i_{PP,TN}$ (left) and operating range with $A_{DM,TN}$ results above 80 dBuA (top 20%) (right)

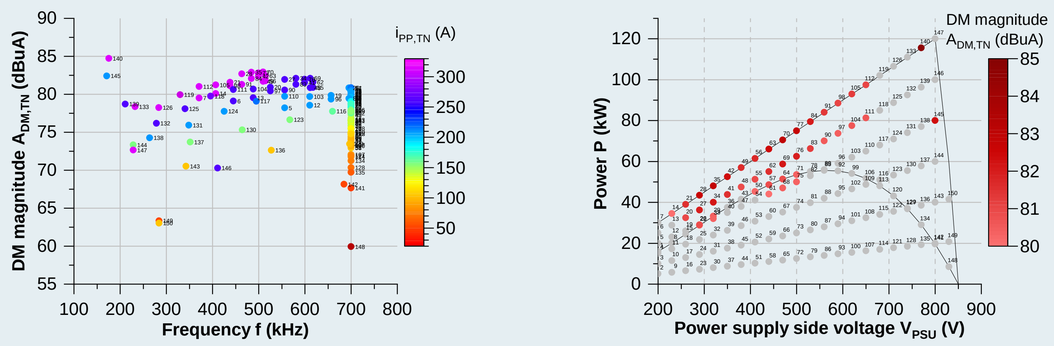

Filter requirements for CM and DM

- Scatter plots and CE spectrum of critical OPs are superimposed
- Comparison envelope (dark red) with DO-160 CAT L,M & H (black) to get filter requirements (red)
- Maximum attenuation for meet standard:
  - CM: ~82 dB at 279 kHz
  - DM-PSU: ~35 dB at 657 kHz
  - DM-TN: ~55 dB at 2.1 MHz

Common mode filter requirements

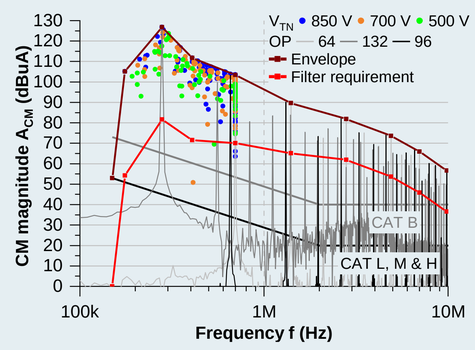

Differential mode filter requirements – for PSU side (left) and TN side (right)

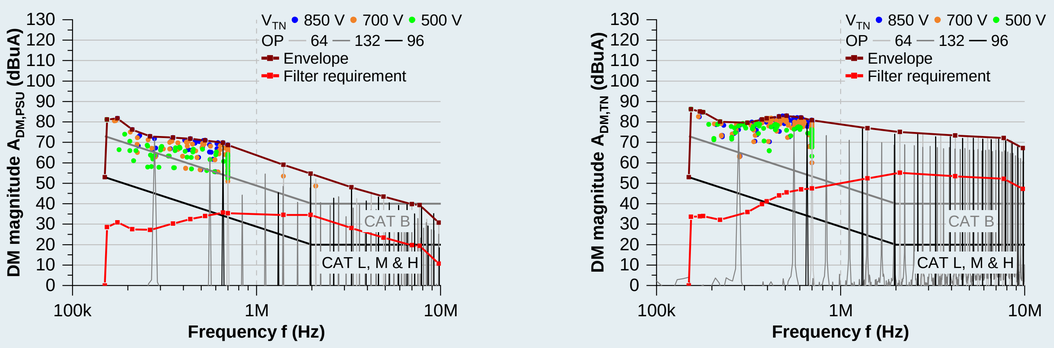

Summary and Outlook

An automated simulation-based workflow for predicting conducted emissions across 150 operating points of a 500 kW multiphase, frequency-variable DC/DC converter for MEA enables early definition of quantitative filter requirements for a tri-port EMI filter in the MW range enabling efficient and reliable filter development to meet DO-160 standards.